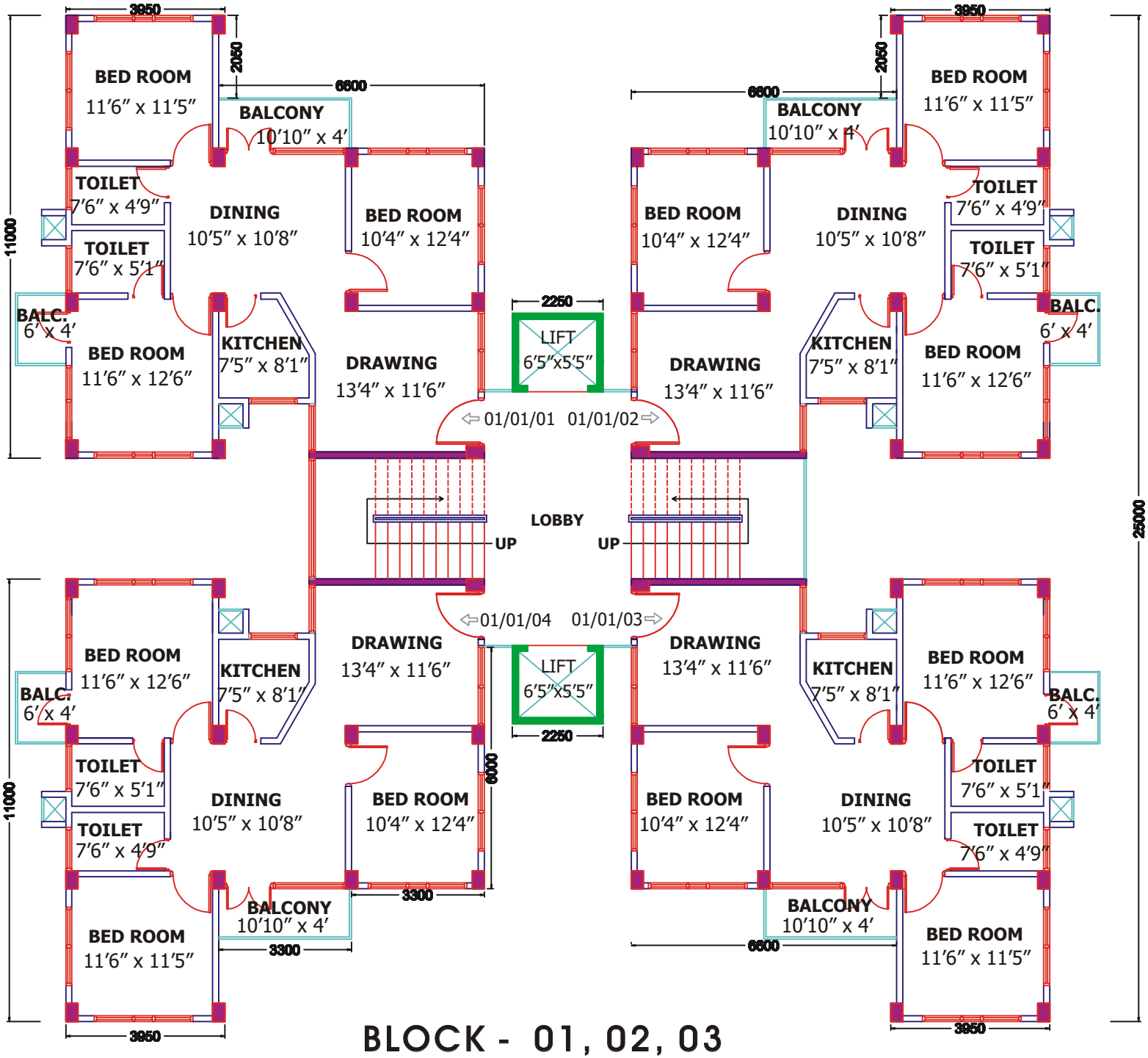

BLOCK - 01, 02, 03

3 BHK, Built-up Area: 1352 sq.ft.